PLUMBING & SPECIFICATIONS

GENERAL CONDITIONS

Drawings

A. Plans of piping and ductwork are diagrammatic only, intended to indicate size and/or capacity where stipulated, approximate location and/or direction and approximate arrangement of one phase of work to another, but not exact detail or arrangement of construction. Plans are based on equipment scheduled. Contractor shall be responsible for changes resulting from equipment other than scheduled.

B. If it is found before installation, that a more convenient, suitable or workable arrangement for a phase of project would result by varying or altering arrangement indicated on drawings, Contractor may change location or arrangement of his work without additional cost to Owner after obtaining written approval.

C. Systems are shown on mechanical drawings that were coordinated with general drawings, however, variations may occur. Verify dimensions, heights, door swings and other information critical to placement of devices with general drawings to assure proper installation. Field measurements shall take precedence over drawing dimensions and shall be verified. Plans shall not be scaled to locate equipment.

D. Verify sewer inverts, gas and water locations before installation of related work; failure to verify services shall be cause for correction of work at Contractor expense. Coordinate installation of all service to building with utility companies and city works department. The mechanical contractor shall verify where he is to connect facilities run by others and include all costs in his bid to connect at those locations and bring services into the building. The mechanical contractor shall provide and set water meter as designated by the city water works department. Gas meter installation to be coordinated with the gas company.

Codes

A. Comply with state and local ordinances and codes, State Plumbing code, Board of Fire Underwriters, National Electrical Code and State Electrical Code. Work shall be acceptable to local utilities and to municipal plumbing, heating and building inspection authorities. Execute, inspect and test work in strict accordance with local, county and state laws, rules, ordinances or regulations and with the American Insurance Association or the Owners Insurance Underwriters. Provide seismic restraints in accordance with local codes.

B. Article A above shall not be construed to permit use of materials or workmanship inferior to that required by these Specifications. Should any changes be necessary to obtain permits and secure approvals, Cont. shall include in his bid all costs for such changes to comply with these authorities without extra cost to Owner.

Fees

Each Contractor shall, for his respective part of the work, make application for, obtain and pay for permits, lateral costs, inspections and tests required by local, state or federal authorities having jurisdiction. Include cost for extension of water mains.

Certificates

Furnish duplicate certificates of inspection and approval from authorities having jurisdiction for approval or acceptance of work, duly signed by proper authorities.

Guarantee

This contractor shall guarantee the entire installation for a period of one year after acceptance by the owner. repair or replace any defective equipment and workmanship at no cost to the owner.

Pressure Tests

A. Leak test water, and sewer pipe lines at normal operating pressure. Do not permanently insulate, cover, or conceal pipe lines until test results are satisfactory.

B. Repair leaks or, if impossible to repair, replace sections of pipe. Repair pin holes in welded joints by re-welding. Close leaks at threaded joints by tightening. Caulking, peening, or permitting leaks to rust tight will not be permitted.

PIPE AND FITTINGS

General

A. Conceal piping in joist spaces, walls of furred spaces. Coordinate all work with architectural drawings.

B. Comply with all state and local codes.

Black and Steel Pipe and Fittings

A. Welded or seamless, Sch. 40, conforming to ASTM A53.

Cast Iron Soil Pipe

A. Service weight, [except Extra Heavy (XH) under foundations] coated cast iron conforming to CS 188 and of lengths by ASTM A74. Provide compatible fittings and specials as required.

B. Malleable iron fittings shall be ANSI B16.3.

C. Joints shall be manufacturer's standard neoprene gasket type or caulked with oakum and lead, as designated. Neoprene gasket shall be Tyler "Ty-Seal" or approved equal.

Copper Pipe

A. Seamless copper tubing, ASTM B88; Type "K" soft annealed for buried use, Type "L" hard temper for above-ground use. Name or trademark of manufacturer and type shall be permanently marked on tubing at intervals not greater than 1-1/2 ft.

B. Fittings for above-ground copper tubing shall be cast, forged, or wrought copper for sweat type joint, ANSI B16.18 or B16.22.

PVC Plastic Drain, Waste and Vent Pipe (PVC-DWV) (above ground only)

Pipe and fittings shall be in accordance with ASTM D2665 and State Plumbing Code.

Pipe Service Schedule

A. Domestic Water Service, Underground

1. Pipe:Type K copper tubing
   Fitting:Wrought copper
   Joint:Silver solder or brazed

B. Domestic Water Service and Compressed Air, Above-Ground

1. Pipe: Type "L" copper
   Fitting: Wrought copper
   Joint: Sweat lead free silver bearing

C. Soil, Waste, Vent, and Storm Drainage, Inside Building

Pipe: Cast iron soil pipe, service weight or PVC DWV
Fitting:Cast iron service weight, C.I. drainage type
Joint:Caulked or Ty-Seal

D. Soil, Waste, Vent, and Storm Drainage, Above-Ground

Pipe: C.I., soil pipe, service weight or PVC DWV
Fitting:C.I., service weight, drainage type
Joint:Caulk, Ty-Seal, or No-Hub

E. Condensate Drain

Pipe: Type L copper
Fitting:Wrought copper
Joint: Sweat lead free silver bearing

Floor Drains

A. General floor drain on grade – unless specified otherwise integral deep seal 'p' trap, double drainage flange and nickel bronze strainer. Josam 30650-A1.

B. General Floor Drains – sink type – Unless specified otherwise double drainage flange, flashing collar, bottom outlet and nickel bronze round strainer. Zurn Z-1900-4

BACKFLOW PREVENTER – Watts 9D pipe drain to hub.

PIPE INSULATION

Insulation, composite jackets, facings, and adhesive for facing or jacket shall have fire and smoke hazard ratings (ASTM E84, NFPA 255 and UL 723) not exceeding flame spread of 25 and smoke development of 50. Accessories, including adhesives, mastic, cements, tapes, glass fabric cloth for fittings shall satisfy same ratings. Products and their shipping containers shall bear a label indicating flame and smoke ratings.

All-Service Jacket (ASJ)

One or two piece molded fiberglass pipe insulation with or without self sealing lap. Jacket shall be laminated aluminum foil, glass reinforcing with vinyl coated kraft paper.

Pipe Support Inserts

Provide rigid, high-density pipe insulation inserts at points of support of equal thickness to adjoining insulation; provide vapor barrier continuity. Insulation inserts shall be 120 degree segments, not less than the following:

1/2" to 2-1/2" pipe size (6" long)

Insulation Schedule

Domestic hot and cold water (1/2" fiberglass w/ASJ)

Hub drains to stack (1" fiberglass w/asj)

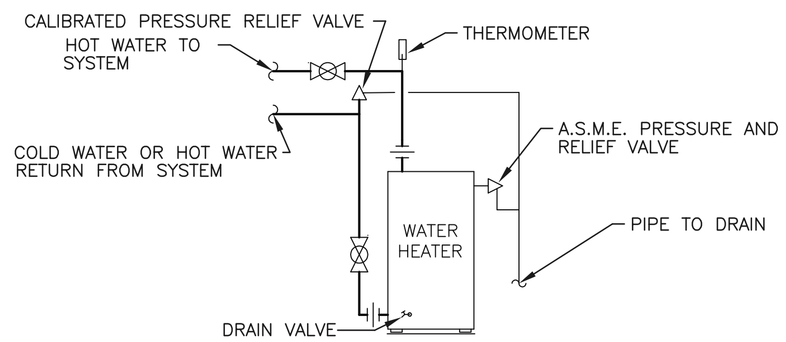

WATER HEATER PIPING DETAIL

NO SCALE

NOTE: USE WATERWAY FITTINGS AT WATERHEATER

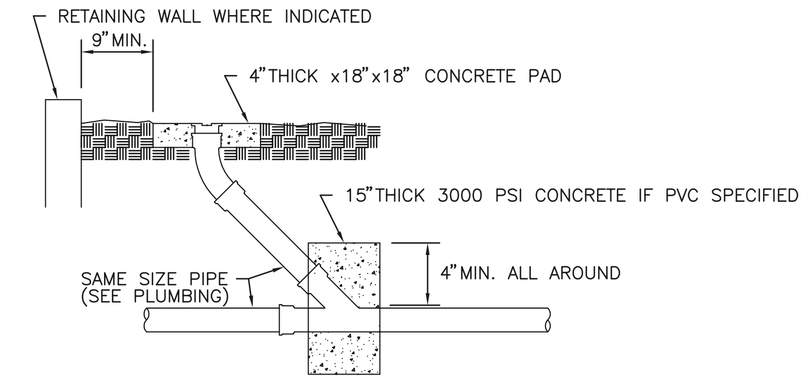

NOTE: THIS DETAIL FOR PIPES UP TO AND INCLUDING 8", FOR PIPE LARGER THAN 8" SEE MANHOLE DETAILS.

CLEANOUT DETAIL (OUTSIDE BUILDING)

NO SCALE

CLEANOUT SCHEDULE

CLEANOUT NUMBER	ZURN	LOCATIONS FOR USE
TYPE 1	Z-1440	HORIZONTAL CAST IRON PIPE
TYPE 2	ZN-1440-1	VERTICAL CAST IRON PIPE
TYPE 3	Z-1470	THREADED PIPE
TYPE 4	ZANB-1460-9	PIPES CONCEALED IN WALL
TYPE 5	ZN-1460-8	PIPES CONCEALED IN WALL
TYPE 6	ZN-1460	PIPES CONCEALED IN WALL
TYPE 7	ZN-1400-2/3	EXTENSION TO GRADE
TYPE 8	ZN-1400-3	SQUARE CERAMIC TILE FLOOR
TYPE 9	ZN-1400-6/7	RESILIENT TILE FLOOR
TYPE 10	ZN-1400-10	TERRAZO FLOOR
TYPE 11	ZN-1400-14	OTHER FLOOR TYPES
TYPE 12	ZN-1400-3	FLOORS CONTAINING WATERPROOF MEMBRANE
TYPE 13	ZN-1400-2/3	ROUGH FINISHED FLOORS

DRAIN SCHEDULE

DESIG.	MFGR.	CATALOG NUMBER	NOTES
FD-1	ZURN	ZB-415-5B-Y	W/TRAP PRIMER
FD-1	ZURN	ZB-415-5B-Y	W/TRAP PRIMER

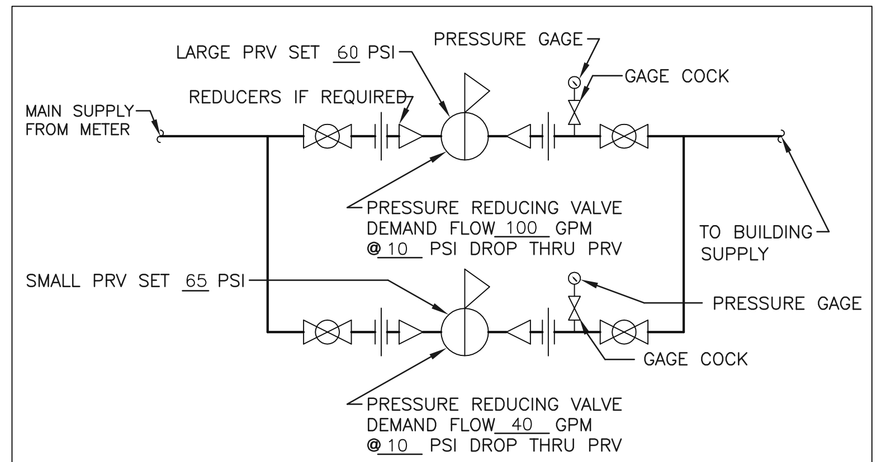

PRESSURE REDUCING VALVE STATION DETAIL

NO SCALE

LEGEND AND SYMBOLS

	DOMESTIC COLD WATER
	DOMESTIC HOT OR TEPID WATER
	DOMESTIC HOT OR TEPID WATER RETURN
	WASTE
	VENT
SD	STORM DRAIN
RL	RAIN LEADER
ERL	EMERGENCY RAIN LEADER
F	FIRE LINE
S	SPRINKLER LINE
G	GAS
	BRANCH SIDE CONNECTION
	BRANCH TOP CONNECTION
	BRANCH BOTTOM CONNECTION
	RISER UP
	RISER DOWN
	LINE BROKEN FOR CLARITY INSTALL CONTINUOUS SEE DRAWING FOR EXTENSION
CW	COLD WATER
HW	HOT WATER
HWR	HOT WATER RETURN
W	WASTE
V	VENT
VTR	VENT THRU ROOF
PRV	PRESSURE REDUCING VALVE
BFP	BACKFLOW PREVENTOR
EX	EXISTING
DN	DOWN
DFA	DOWN FROM ABOVE
UFB	UP FROM BELOW
WH:A	WATER HEATER TYPE A SHOWN
FD-A	FLOOR DRAIN TYPE "A" SHOWN
CO-A	CLEANOUT TYPE "A" SHOWN
RD-A	ROOF DRAIN TYPE "A" SHOWN
MH-1	MANHOLE-NUMBER 1 SHOWN
CB-1	CATCH BASIN-NUMBER 1 SHOWN
HV-1	TEMPERING VALVE HOLBY 1" SIZE SHOWN
FLR	FLOOR
GEN	GENERAL
CTE	CONNECT TO EXISTING
GR-A	GAS REGULATING VALVE 5 TO 2 PSI
GR-B	GAS REGULATING VALVE 2 PSI TO 7" WC REQUIRED AT ALL APPLIANCES
GT	GREASE TRAP
SG	SEISMIC GAS SHUTOFF VALVE
	BALL VALVE
	CHECK VALVE
	SHOCK ABSORBER-PLUMBING AND DRAINAGE INSTITUTE SIZE "A" SHOWN
3"SV	STUDOR VENT 3" SIZE SHOWN

FIXTURE SCHEDULE

SYM.	MANUFACTURE	FIXTURE NO.	SIZE	TRIM	SUPPLIES	WASTE	TRAP	ROUGHING IN CONNECTION C.W.	H.W.	WASTE	VENT	REMARKS
WC-1	KOHLER	K-4302	---	ZURN Z-6000AVWS1	---	---	---	1"	--	4"	2"	SEE NOTE 1
WC-2	KOHLER	K-4350	---	ZURN Z-6000AVWS1	---	---	---	1"	--	4"	2"	SEE NOTE 1
U-1	KOHLER	K-4972-T	---	ZURN Z-6003AVWS1	---	---	---	3/4"	--	2"	1 1/2"	SEE NOTE 2
L-1	KOHLER	k-2196-8	---	KOHLER	McGUIRE H2165	W/FIXTURE	McGUIRE 8872	1/2"	1/2"	1 1/4"	1 1/4"	
L-2	KOHLER	k-2006-8	---	KOHLER	McGUIRE H2165	W/FIXTURE	McGUIRE 8872	1/2"	1/2"	1 1/4"	1 1/4"	SEE NOTE 3
S-1	ELKAY	DLR-2222-10-4	22x22	ZURN Z-831C4	McGUIRE H2165	ELKAY LK-372	McGUIRE 8872	1/2"	1/2"	1 1/2"	1 1/2"	W/Z83600 DRINKING BUBBLER
SS-1	STERN WILLIAMS	SB-902	24"x24"12"	SEE NOTE 4	---	W/FIXTURE	"P"	3/4"	3/4"	3"	2"	
EWC-1	OASIS	P8AM		W/FIXTURE	McGUIRE H2165	W/FIXTURE	McGUIRE 8872	1/2"		1 1/4"	1 1/4"	

NOTES:
1. PROVIDE OLSONITE SEAT MODEL# 10CC-CC/SS-FR-AM.
2. INCLUDE ZURN URINAL CARRIER SYSTEM Z-1221.
3. INCLUDE ZURN CONCEALED ARM CARRIER SYSTEM Z-1231.
4. PROVIDE T-15-VB SINK FITTING, T-35 HOSE AND WALL BRACKET AND T-40 MOP HANGER.
5. INCLUDE SHOCK ABSORBERS PER THE PDI MANUAL.

WATER HEATER : WH-1

MFR. STATE MODEL NO. SB6 40 6IFE

STORAGE: 40 GAL. WORKING PRESS.: 150 PSI

RECOVERY 30 GPH AT 80°F RISE.

INPUT: ELECTRIC 6000 W, 208V 3 PHASE

NOTES:

1. INCLUDE AMTROL ST-12 EXPANSION TANK.

WATER HEATER : WH-2

MFR. STATE MODEL NO. SB6 52 6 IFE

STORAGE: 52 GAL. WORKING PRESS.: 150 PSI

RECOVERY 30 GPH AT 80°F RISE.

INPUT: ELECTRIC 6000 W, 208V, 3 PHASE

NOTES:

1. INCLUDE AMTROL ST-12 EXPANSION TANK.

C&A No. C&A# 06-025

CAMPBELL & ASSOCIATES, INC.
CONSULTING ENGINEERS
651 E. 4th St. Chattanooga, TN 37403
(423) 267-9718 Fax: (423) 265-7879
E-mail: caengrs@caengrs.com
www.caengrs.com

revisions

print distribution

This document is the property of C&A, Inc. and is not to be reproduced or used without express written permission in writing granted.

AIM Center Headquarters

West Martin Luther King Boulevard
Chattanooga, Tennessee

file: 140.05

date: SEPT 8 2006

Architects • Planners • Interiors
651 East Fourth Street, Suite 500
Chattanooga, Tennessee 37403
423.756.5046 (v) 423.756.8021 (f)
www.twharch.com

TWH Architects, Inc.

sheet: P3.0